ELECTRIC POWER RESEARCH INSTITUTE

Advanced Compressed Air Energy Storage (CAES) Demonstration Projects

Prepared for:
EPRI Renewable Energy Council
April 5-6, 2011 Meeting
Starr Auditorium

Prepared by:
Dr. Robert B. Schainker
EPRI Senior Technical Executive
rschaink@epri.com
(650) 855-2104

April 6, 2011

Simplified Schematic of "Standard" Compressed Air Energy Storage (CAES) Plant

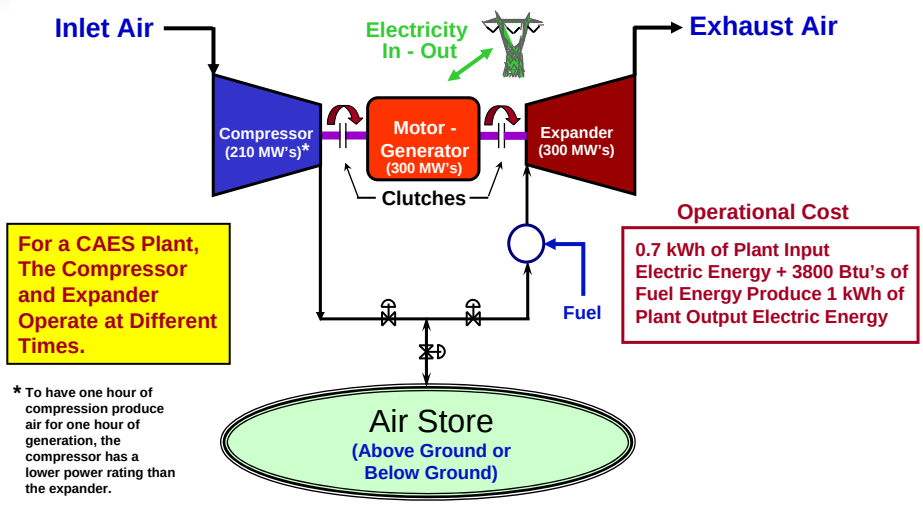

For a CAES Plant, The Compressor and Expander Operate at Different Times.

Operational Cost

0.7 kWh of Plant Input Electric Energy + 3800 Btu's of Fuel Energy Produce 1 kWh of Plant Output Electric Energy

* To have one hour of compression produce air for one hour of generation, the compressor has a lower power rating than the expander.

Geologic Formations Potentially Suitable for CAES Plants That Use Underground Storage

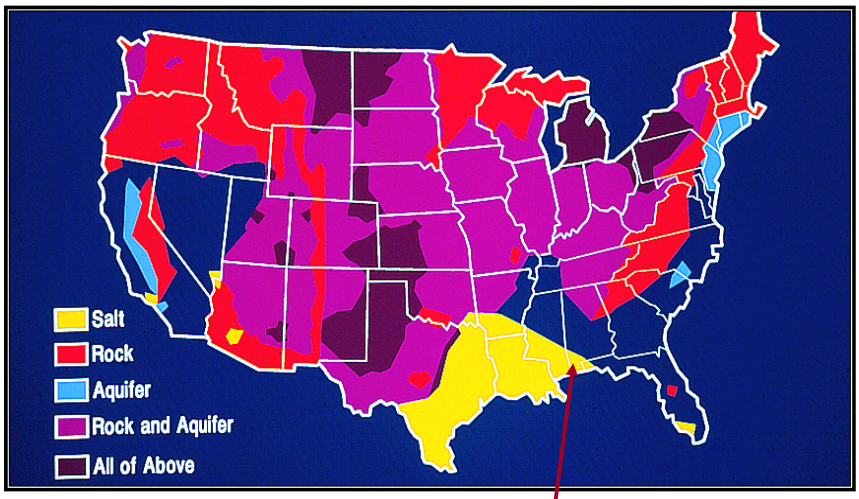

110MW-26Hr Alabama CAES Plant

ARRA Stimulus (DOE Cost Shared Demo Projects) {American Recovery and Reinvestment Act of 2009}

- DOE published final Funding Opportunity Announcement June 25, 2009. Bids were due and submitted Aug 26, 2009.
- EPRI staff assisted two utilities to submit and win contracts
  - NYSEG: 150 MW – 10 Hr Adv. CAES Plant Using Underground Salt Cavern for the Air Store
    - Received $30M from DOE
  - PG&E: 300 MW – 10 Hr. Adv. CAES Plant Using Underground Depleted Gas Field or Porous Rock Media for the Air Store
    - Received $25M from DOE
- DOE Utility Contracts Sent To Both Utilities November 15, 2010
  - NYSEG Signed Their Contract November 30, 2010
  - PG&E Sign Their Contract February 4, 2010

EPRI Adv. CAES Demo Project: Phased Approach

Project Phases:

1. Econ, Engnrg Design, Permitting, Costing, Vendor Quotes and Engnrg Trade-Off Studies
2. Construct Plant
3. Monitor Plant Performance and Reliability

Schedule (Optimistic):	2009	2010	2011	2012	2013	2014	2015
150MW / 300 MW - 10 Hr. Plant Using Below Ground Air Store							
15 MW / 50 MW - 2 Hr. Plant Using Above Ground Air Store							

Notes:

1. Two utilities are hosting the planned construction of Advanced CAES Plants (PG&E and NYSEG), both using underground air storage systems
2. Host for plant using above ground air store is still a possibility
3. All Adv CAES Demo Project participants will obtain project results from all work performed during all phases of the project and for all types of plants built.

APPENDIX

NYSEG Advanced CAES Demo Plant Location

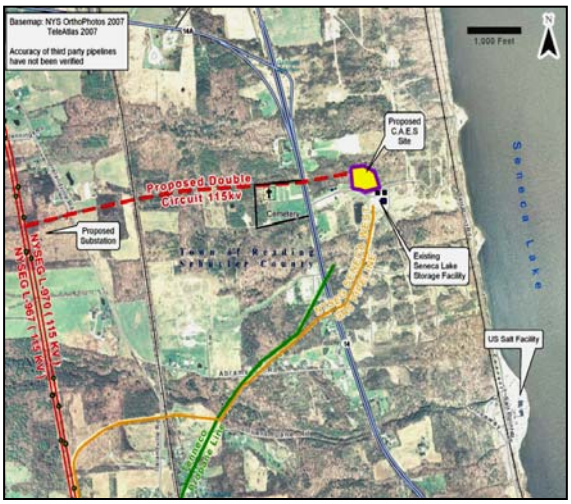

- 3 miles north of Watkins Glen on the west side of Seneca Lake.
- Site owned by US Salt, subsidiary of Energy Midstream, LLC. Has been an active solution salt mine for the last 100 years.
- Energy will re-open and test a solution-mined salt cavern capable of 0.5 BCF at maximum pressure and a working volume of at least a 0.32 BCF.
- The cavern and plant will have the capacity to provide more than 16 hours of a combination of power production.
- Site features an existing high- pressure natural gas pipeline and brine treatment facilities, and is located 1.5 miles from high voltage transmission lines.
- Site is ideally suited for future increases in plant capacity due to the existence of numerous depleted salt caverns.

EPRI ELECTRIC POWER RESEARCH INSTITUTE

APPENDIX

PG&E Advanced CAES Demo Plant Location

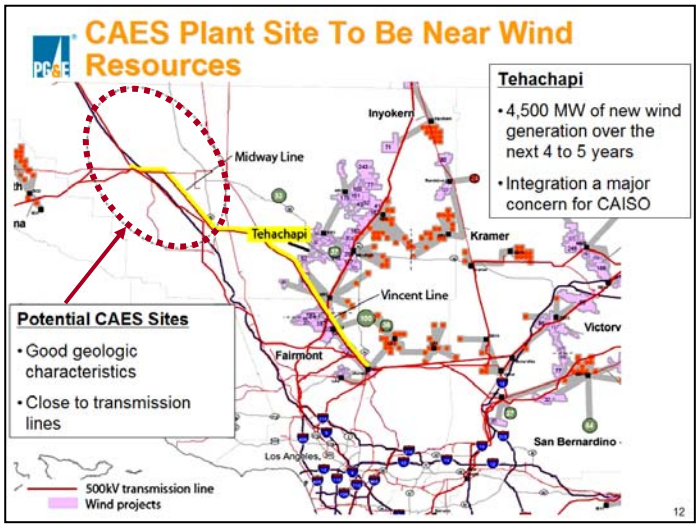

15 MW – 2 Hr. Adv. CAES Plant Using Pipeline Type of Above-Ground Air Storage System

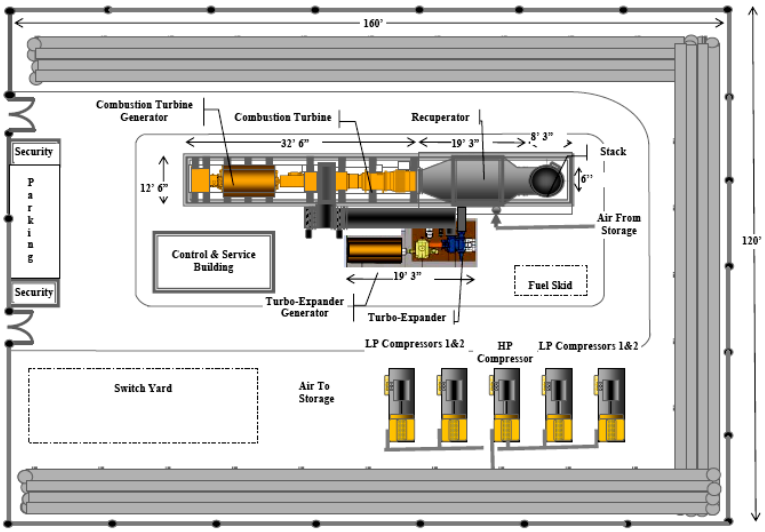

Comparison of First Generation and Advanced CAES Plant Designs

First generation CAES plant design (i.e., Alabama plant design)

- Complex set of turbomachinery
- Customized high pressure combustor
- Meets NOx air quality emission standards with additional auxiliary equipment
- Cannot process stored air that has any oxygen depletion
- Construction time is two tothree years

Advanced CAES plant design

- Expected to have lower capital cost and lower operating cost than the first generation plant design
- Expected to meet existing air emission standards (including NOx) without additional auxiliary equipment added to the plant
- Construction is anticipated to take two to three years

CAES Demo Project Newsletter (Published Quarterly)

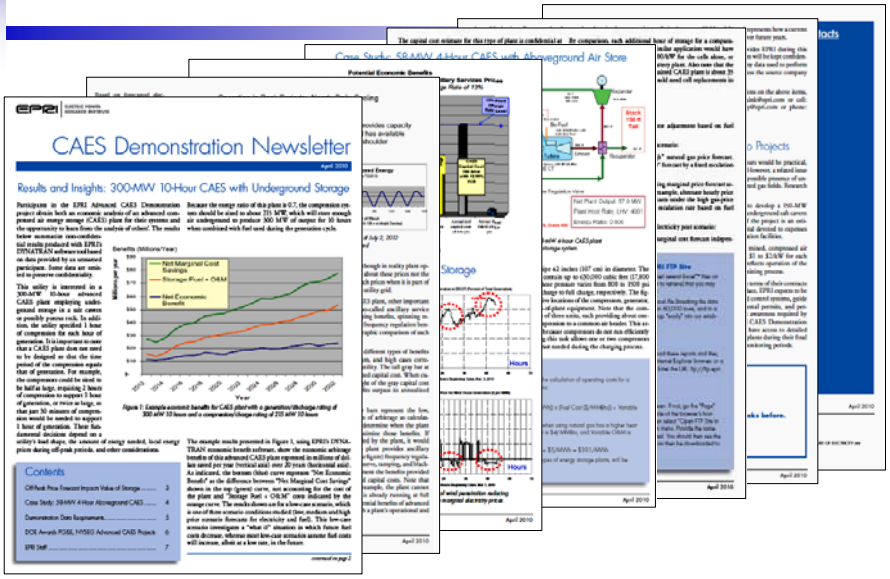

Questions ?

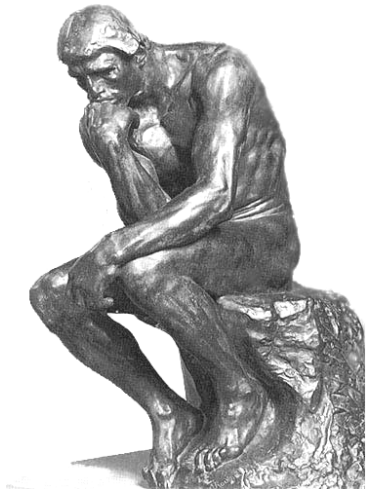

APPENDIX

Alabama CAES Plant: Dresser-Rand Design Schematic Updated To 2011 Turbomachinery + 2011 NOx Standards

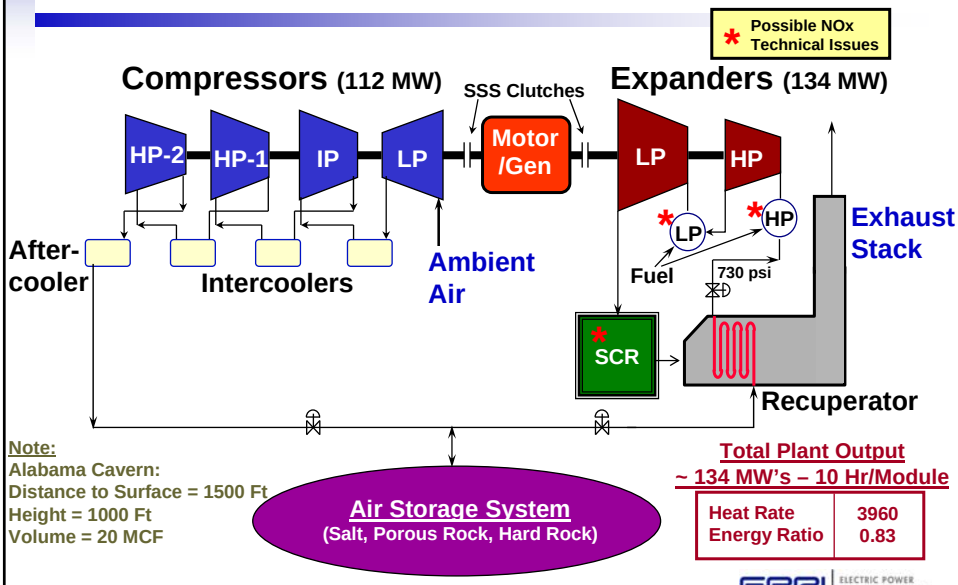

Note:
Alabama Cavern:
Distance to Surface = 1500 Ft
Height = 1000 Ft
Volume = 20 MCF

Total Plant Output
~ 134 MW's – 10 Hr/Module

Heat Rate	3960
Energy Ratio	0.83

APPENDIX

Alabama CAES Plant
110 MW Turbomachinery Hall

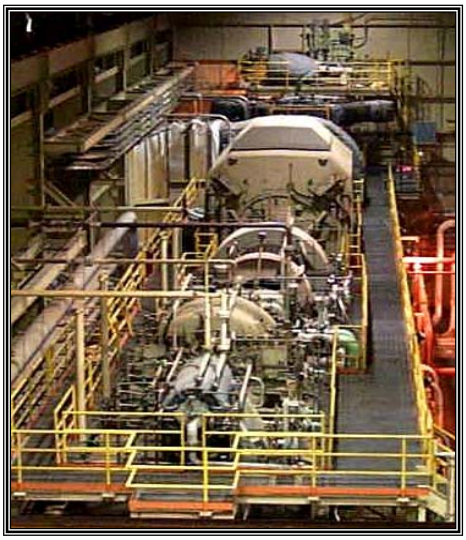

Expansion Turbines

Clutch

Motor-Generator

Clutch

Compressors

ELECTRIC POWER RESEARCH INSTITUTE

APPENDIX

Advanced CAES Plant: Schematic
- - - Second Generation "Chiller" Design- - -

Estimated Cap. Cost (2011 $) ~ $700/kW to $800/kW + Substation, Permits & Contingencies & NOX Control (For Salt Geology)

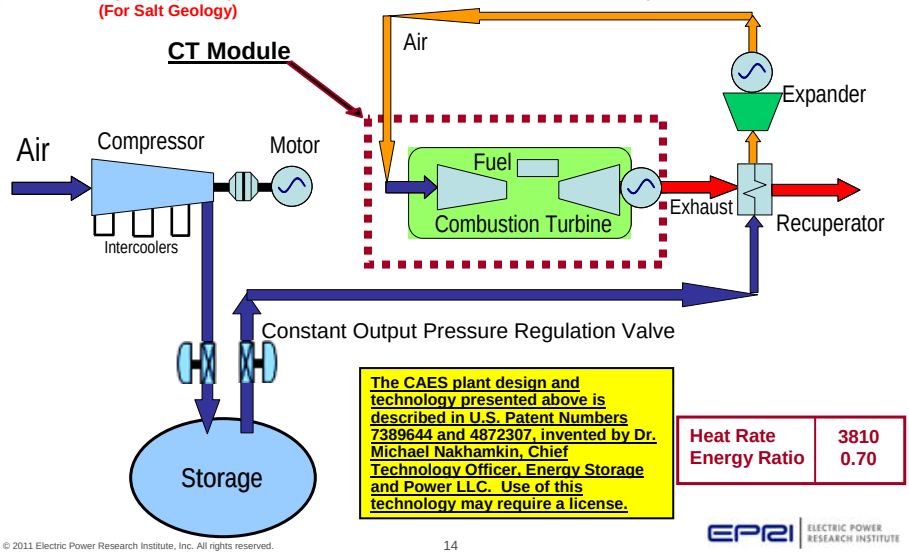

The CAES plant design and technology presented above is described in U.S. Patent Numbers 7389644 and 4872307, invented by Dr. Michael Nakhamkin, Chief Technology Officer, Energy Storage and Power LLC. Use of this technology may require a license.

Heat Rate	3810
Energy Ratio	0.70

ELECTRIC POWER RESEARCH INSTITUTE

APPENDIX

Underground Natural Gas Storage Facilities in the Lower 48 United States

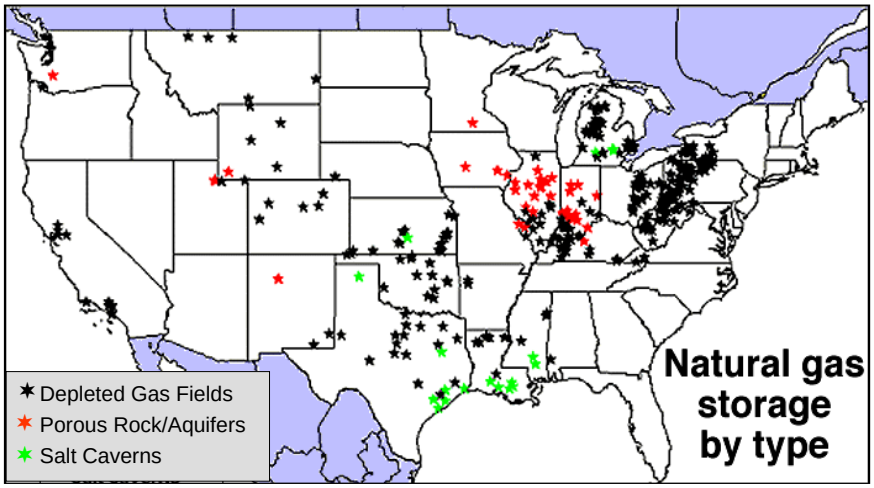

APPENDIX

Simplified Schematic of "Standard" Simple Cycle Combustion (CT) 100 MW Plant

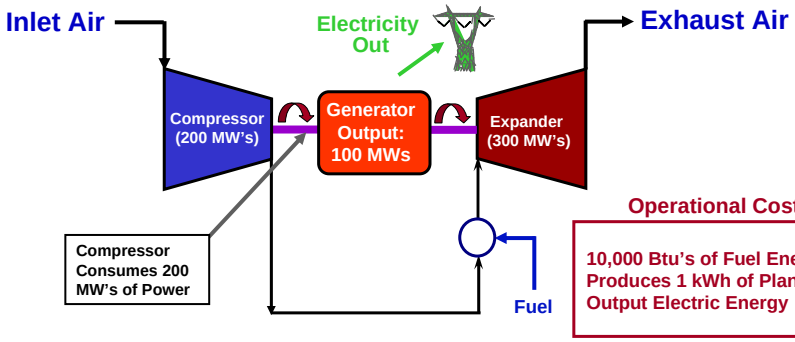

Operational Cost

10,000 Btu's of Fuel Energy Produces 1 kWh of Plant Output Electric Energy

For a CT Plant, The Compressor and Expander Operate at The Same Time. The Expander Produces About 300 MW's of Power and the Compressor Consumes About 200 MW's of Power; Thus, the Net CT Output is 100 MW', which means the CT Capital Cost on a $/kW basis is about Three (3) Times More Expensive than the CAES Capital Cost, Without Accounting For The Costs of the Air Store, Generator, Valves, Clutches and Balance of Plant.